Ω-CHECK™

Product Overview

Ω-Check™ Concentric Neutral Resistance Tester

The Product & its Application

High Voltage, Inc. introduces its new *Ω-CHECK™ Concentric Neutral Resistance Tester; the Ω-Check™ Tester.* It is designed to measure the extent of deterioration of a concentric neutral of a power cable (how many strands have opened). A concentric neutral is made up of many strands of round or flat wire helically wrapped around the cable insulation and usually grounded at both ends. Its purpose is many, as the brochure describes. Severe problems can occur for a utility if this neutral has corroded to a point where it can no longer carry return currents and is not capable of returning fault currents from a fault location back to the grounded end of the neutral. This concentric neutral may have 6 – 20 (?) strands of aluminum or copper wire wrapped around the insulation. Whenever a strand corrodes and opens, there is a very incremental and measureable change to the neutrals resistance. This is what the instrument measures; how much of the neutral remains intact. **There is more information about the design and use of the product in the four page Ω-Check™ brochure from HVI.**

The Ω-Check™ Neutral Tester History

This product has been produced for almost 20 years, originally developed by Georgia Power (now part of The Southern Company) in their Georgia Power Research Center. They, like many, had a problem with corroded neutrals and worked on developing a method of testing them. This research and development center was later transferred to Georgia Tech Institute in Atlanta and became what is now NEETRAC. www.neetrac.gatech.edu. At that time, GP transferred the rights to the product to Utility Tools & Services of Roswell, Georgia. The product development was continued and completed and the product was marketed throughout the US. In 2012, UTS decided to no longer produce the product and asked HVI if it would like to take it over, an interest expressed to UTS years ago. So, the Ω-Check™ is now a product of High Voltage, Inc. HVI did not buy UTS nor any assets or liabilities of the company and is not responsible for existing products in the field, although we will try to help current customers the best we can. We are simply building a similar product UTS no longer wishes to carry that is not patent or Trademark protected. At this time we are applying for Trade Mark status for the name Ω-Check™.

UTS has sold >80 units, mostly to utilities that installed thousands of feet of non-jacketed concentric neutral cable in the 70's & 80's. Surprise, the neutral wires corroded. Needing to solve unacceptable voltage fluctuations and shock problems from ungrounded feeds, as well as no longer having a proper return current path, and worse, no return path for high fault currents, many utilities turned to this product, the only product of its kind. There are still unjacketed cables in the ground but also jacketed cables are subject to corrosion when the outer sheath is punctured and water gets in. There are also other applications where the Ω-Check™ is needed that will be further explored and developed. A **ground cable integrity test** is another good application, mentioned in the brochure.

The Ω-Check™ Tester is a unique product serving a specific application. There is no other product like it. There may be other techniques used to try to perform the same tasks, like using a TDR/Radar unit to look at the neutral wires or a DC voltage output resistance meter, but none can perform the job like the Ω-Check™.

HIGH VOLTAGE, INC. *31 County Rt. 7A Copake, NY 12516 Voice: (518)329 3275 Fax: (518)329 3271*
Email: sales@hvinc.com Web: www.hvinc.com

Standards Regarding Neutral and Cable Resistance Testing & the Ω-Check™

IEEE Std. 1617™-2007 Guide for Detection, Mitigation and Control of Concentric Neutral Corrosion in Medium Voltage Underground Cables. This is the standard that covers the subject and the methods of testing underground concentric neutrals and it includes the Ω-Check™ as an approved method of testing.

IEEE Std. 81-2012 Guide for Measuring Earth Resistivity, Ground Impedance, and Earth Surface Potentials of a Grounding System. This standard is used for testing ground cable integrity and other grounding methods. It approves the use of several test methods including that of the Ω-Check™.

Applications & Users

Utilities: The Ω-Check™ Tester should be of interest to the Distribution Engineering department and whichever group is in charge of MV cable maintenance. Also, there may be a group responsible for cable replacement and/or cable injection. There are several good reasons to need the Ω-Check™.

If a utility has neutral problems; they usually know it. Maybe they have unexplained voltage fluctuation problems, or incidents of people getting shocked from water pipes and fixtures, breakers not tripping when they should (because the current return path is gone), or cases where fault currents jumped to adjacent gas/water/cable/telephone utilities and caused damage. All can be caused by missing neutrals. If injecting cables to extend insulation life, the neutrals should be checked, usually making sure at least 50% remains. Why pay a lot of money to inject and extend insulation life only to have a cable with no useful neutral left in a few more years. The neutral condition is a good data point for helping to establish the priority for cable replacement or injection, like Tan Delta diagnostic testing also.

Pressure to Improve Reliability: Utilities are under constant pressure by Public Utility Commissions, the public, and politicians to improve service reliability and safety, implement service cost reduction programs, and show they have active cable testing programs. This product helps with all of that.

Withstand or Diagnostic Testing: A solid ground shield around a cable is vital to obtaining accurate data measurements of the cables insulation condition when tested. Whether the cable is tested with DC, 50/60 Hz. AC, or VLF AC voltage, an intact ground shield delivers the most complete test results. This is true for a simple overvoltage withstand test (hipot). It is even more vital when performing diagnostic testing like VLF Tan Delta or VLF Partial Discharge tests, or when using power frequency voltage for these same tests. Without a proper metallic shield surrounding the cable, acting as the outer electrode for these insulation tests, TD and PD test results will be suspect.

Not Just for Utilities: **Service Companies** (NETA shops and independents), large **electrical contractors**, companies that offer **PD/TD testing**, **cable injection/rejuvenation** providers, and **large commercial and industrial customers** all can use the Ω-Check™. It is an excellent tool for providing another set of data measuring cable quality to help prioritize replacement or injection of cables. Test many cables, rate and compare them, and attack the worse first.

Cable Injection to Extend Life: If one is injecting/rejuvenating cables, they should first test the neutrals to insure that enough remains, perhaps >50% to make injection worthwhile. Most injection companies use a TDR/Radar unit to look down the cable to examine the neutral. Some use the Ω-Check™, or both. The TDR method is not always accurate, as it is a highly interpretive test that usually provides an overly optimistic assessment of the neutral condition, which means possibly injecting cables with inadequate neutrals. The Ω-Check™ provides a truer assessment of the neutral condition. The best would be to use the TDR and the Ω-Check™ together.

Note: Those considering injection may rather neutral test their own cables and tell the injection company which to inject, or at least spot test cables to verify the neutral data provided by the service company.

Marketing Note: Unlike a hipot that a utility or testing service uses for several applications and will definitely need another in the future, with the Ω-Check™ one has a known need for it or doesn't. It is a very simple, low tech device offered by a well-known and respected company – **High Voltage, Inc.** Demonstrations will rarely be provided; possibly if someone is considering using a TDR to evaluate the neutrals and wants to compare the two results. The device and its use are very simple and clear: if one needs the device they can buy it.

There is no other product to compare it to. It was first developed by Georgia Power for their own use and has since been used by many of the top utilities, and others, in this country for nearly 20 years. It is not "New Technology" or a "New Product" needing to be proven.

List of Users

Attached is a partial list of users of the Ω-Check™. As you will see, it has been used for many years by some of the more prominent utilities in the country, as well as NEETRAC, partial discharge cable testing companies, testing service companies, and cable rejuvenation companies that need to verify the condition of the neutral before injection. Some of the larger utilities have purchased many units, needed to test thousands of miles of UG cable.

1994	Georgia Power Corp.
1995	Snapping Shoals EMC
1995	PECO Energy
1995	Con Edison
1995	UGI Utilities
1995	BG&E
1995	PP&L
1995	Metropolitan Edison
1996	Blattenberger
1996	SMECO
1996	PEPCO
1996	BG & E
1996	Colorado Springs Utilities
1996	Riggs Distler
1996	Hydro Quebec
1997	Pacific Gas & Electric
1997	Asplundh
1997	OG&E
1997	City Of Austin
1997	PSE&G
1997	GPU
1998	Com Ed
1998	Southern California Ed.
1998	Pacific Gas And Electric
1998	Connectiv (Delmarva)
1998	AEP
1998	Tullahoma Power System
1998	APS
1999	Salt River Project
1999	Virginia Power
1999	Ultra Power
1999	Puget Sound Energy
1999	NU / CPL
1999	SDGE
2000	Keyspan
2000	Nevada Power Co
2001	Idaho Power Company
2002	Central Hudson
2002	Portland GE
2002	Conn. Light & Power
2003	Utilimap
2004	Peach State Instruments
2005	WE Energies
2005	Utilix Corporation
2007	Potelco, Inc.

Conclusion

The **Ω-Check™ Concentric Neutral Resistance Tester** is a great product with definite applications and with a long history of successful use by many of the biggest names in the US utility industry and the other users mentioned. Its simple design and operation make it easily understood by all and an easy buy decision where needed. There is no direct competition and the price is reasonable. **It is produced and supported by High Voltage, Inc. and made in the USA.**

The Ω-Check™ Concentric Neutral Resistance Tester

Below are several pictures that may help one to understand the product and its application. These pictures are in the brochure and explained in detail.

Typical 15 kV or 25 kV cable

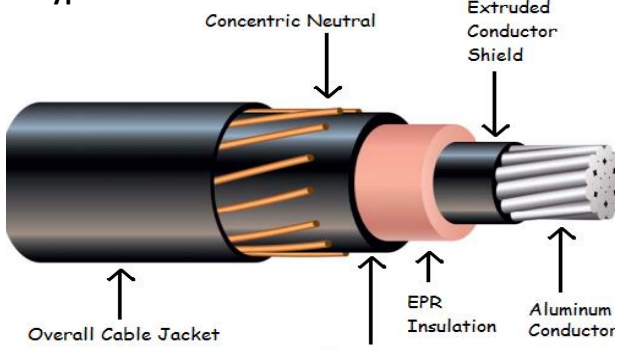

Many older HMW & XLPE cables are "Unjacketed" or "Bare Concentric"

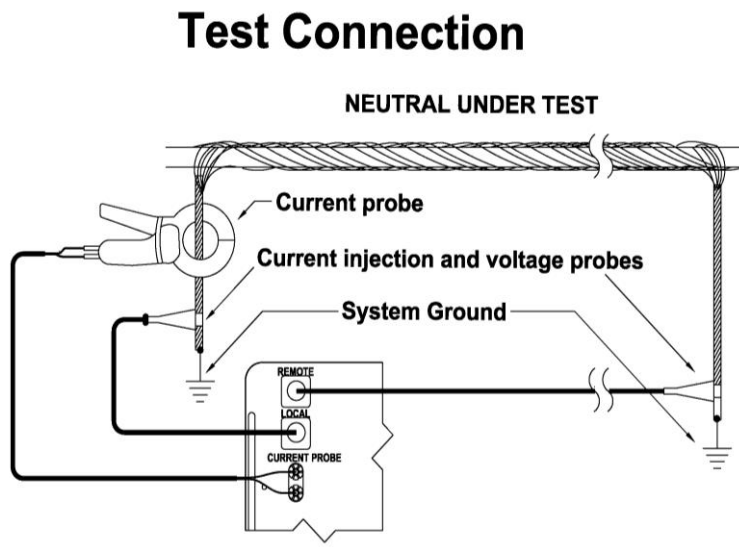

The Ω-Check™ System

The Ohm symbol Ω is the Greek character Omega. You may wish to copy the official logo shown here in jpeg format and save it for easy use when including it in your emails and letters. The font is Arial Bold.

Ω-CHECK™

Front Panel **All Line, Load, and Ground connections are made here**

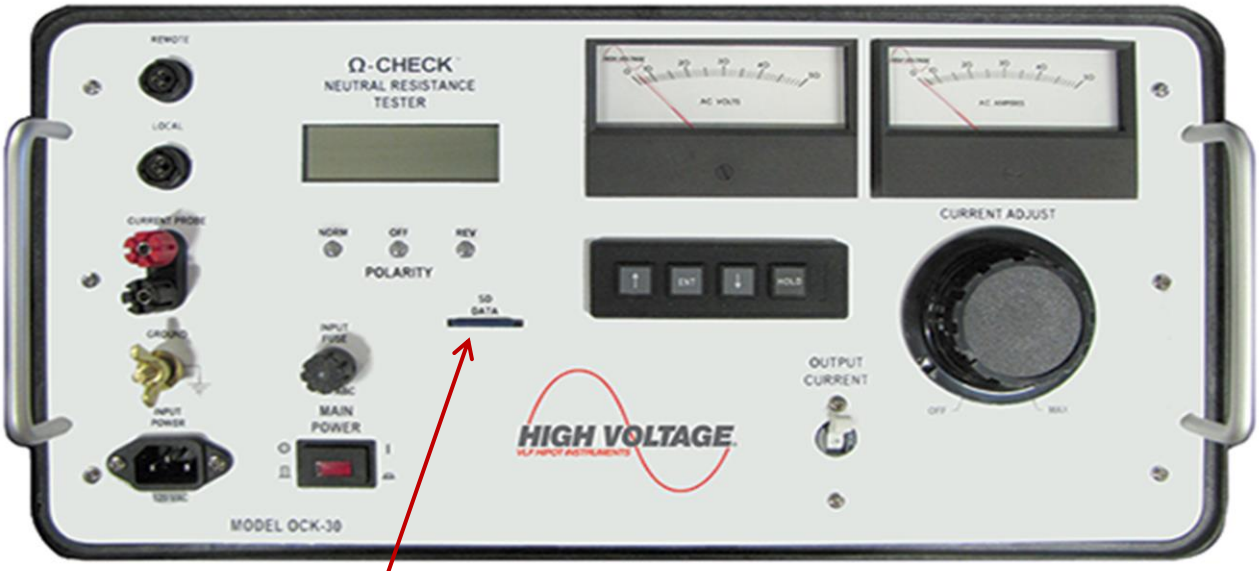

SD Data card provided to store and download test data **Very simple controls and data entry**

Ω-CHECK™

CONCENTRIC NEUTRAL TESTER

The Best Method of Measuring Concentric Neutral Integrity vital to maintaining system stability, reliability, and safety

HIGH VOLTAGE®
VLF HIPOT INSTRUMENTS

Easy to use
Simple operating procedure
Few controls and settings to learn
No programming – data entry only
Tests take <10 seconds once setup

Easy to set up
Cables Remain Energized
Neutral remains connected
Light weight and portable
Cable reels make setup easy

Field proven for >15 years
Rugged & Reliable
Simple to service
Water Resistant
Used by many utilities

Results instant & clear
% of neutral remaining
Resistance of neutral
Power factor of neutral
Volts & amps on neutral

Designed specifically for testing energized cables, the Ω-CHECK™ Concentric Neutral Tester
accurately measures how many strands of a concentric neutral remain intact

Safety and Operational Benefits of Healthy Neutrals – Many Good Reasons to Test

- Ω **Help prevent shock hazard conditions** and locate stray voltages and currents
- Ω **Help overload protection systems function** as expected during cable faults. Limit possible damage.
- Ω **AC Withstand and diagnostic testing** results, with VLF or 50/60 Hz, can be compromised if no neutral
- Ω **Injecting/Rejuvenating cables?** Make sure enough neutral remains to justify the effort and expense
- Ω **Prioritize cable replacement** efforts by comparing the neutral condition of many cables and replace only the bad ones, not those with acceptable neutrals
- Ω **Fault locating cables:** avoid lost time, minimal success, and unsafe conditions if little neutral remains. Don't thump cables with open neutrals, never to find the fault and sending kjoules of energy into the earth

The Ω-CHECK™ Difference: AC voltage (not DC) is applied, polarity reversing for neutral load current compensation is performed, voltage drop measurements are taken at the neutral ends, and the test results are compared to the data entered of the actual cable under test, making the Ω-CHECK™ tester the most accurate method of measuring concentric neutral integrity. It is economical, easy to operate and interpret, very portable, rugged, reliable, and easily serviced.

What is a Concentric Neutral?

Like the pictures below show, a "Concentric" Neutral is a ground shield designed with many individual strands of wire that are wrapped around the outside of a cables insulation layer. They are helically wrapped to twist around the insulation along the length of the cable. The primary purpose for the neutral is to provide a uniform ground shield around the cable to equalize and minimize voltage stress on the cable and to provide a low impedance path for the distribution systems Return and Fault currents. The many purposes of the neutral are described below. There are other neutral designs that use a continuous **foil wrap** or a **tape shield** with many overlapping strips of copper or aluminum. The Ω-CHECK™ tester is designed to test cables with concentric neutrals.

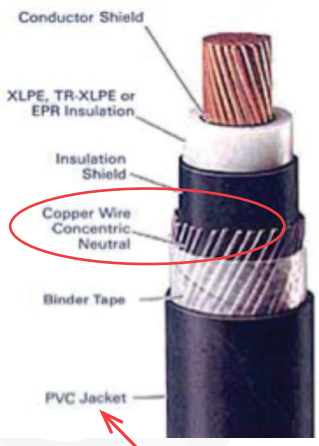

"Jacketed" Cable

The Vital Functions of a Concentric Neutral:

- Creates a uniform ground plane around the cable to insure equal voltage stress
- Provides a path for Return current if circuit design requires it be used for that
- Provides a safe path for short circuit currents, instead of nearby gas or water pipes
- Maintains system voltage stability and uniform voltage drop along a cable
- Helps prevents high fault currents from reaching a conductor of an adjacent cable
- Permits predictable overload relay coordination, preventing possible damage
- Provides safety from dig-ins of live cables by providing a grounded shield cover

"Unjacketed" Cable

What can the Ω-CHECK™ Test?

The Ω-CHECK™ tester is designed to test concentric neutrals that consist of many round or flat wires. It cannot test neutrals that are "foil" or "tape shield" designs. The Ω-CHECK™ tester does not measure the partial corrosion of the wires but measures if they are **open or closed** due to total corrosion or breakage. When a strand opens, there is a very incremental and measureable change in the neutral's resistance. **This is what the Ω-CHECK™ tester measures; how many strands remain continuous.**

The Ω-CHECK™ tester can also be used for other applications, like **substation ground cable integrity testing per IEEE Std 81-2012**, that require an accurate, high current AC output ohm meter designed to make connections far apart.

Theory of Operation

The Ω-CHECK™ tester is designed to measure how many strands remain of a concentric neutral. The instrument consists of a variable 48 volt AC power supply, a microprocessor based programming, control, and acquisition module, a "clamp-on" current meter, and two 500' reels of two-conductor test lead for connecting to the Local and Remote ends of the neutral being tested: one wire pair is used to inject the current through the neutral and the other pair is used to measure the voltage across the neutral. The AC power supply injects a current up to 30 amperes into the total ground system. The current probe placed around the neutral tested measures the current flowing only in that neutral. The diagram here shows how the system works.

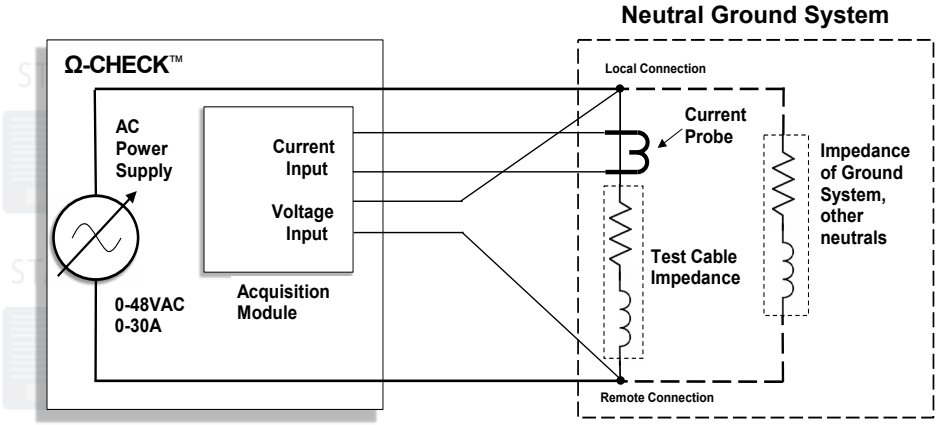

The acquisition module receives the voltage across and the current through the tested neutral, from which the resistance and power factor are computed. Relays are used to swap the test current between polarities to help compensate for neutral load current effect. From the cable's neutral data previously entered into the controls, the system computes, compares, and displays the % of the neutral remaining, and other valuable data.

Method of Operation

The Ω-CHECK™ compares the resistance of the neutral tested to a perfect neutral of the same specifications. To do this, the operator first enters the cables neutral data into the controls. The accuracy of the test results are as good as the accuracy of the data entered.

Data entered: ① Cable length ② # of neutral strands ③ AWG size of strands ④ Test ID #

The microprocessor computes the ideal resistance of a neutral of that specification and then compares it to the test data gathered. The condition of the tested neutral is displayed along with several other important test results.

Test Connections

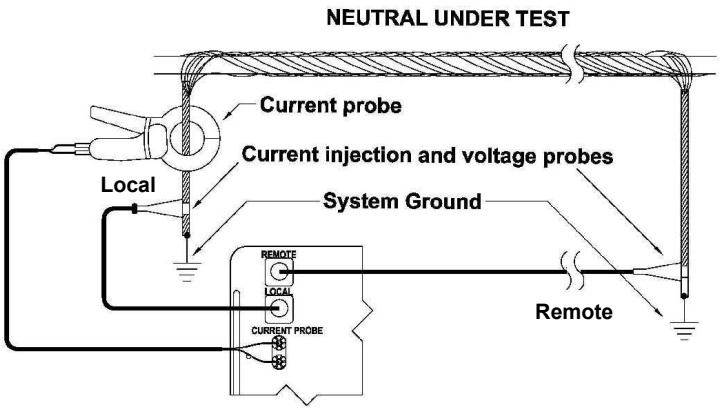

Setup & Test Procedure

A two wire cable connection is made from the controller to the ***Local & Remote*** ends of the cable

One set of wires injects the AC current through the neutral while the others measure the AC voltage drop across the neutral

The clamp-on current meter is placed around the neutral tested

The operator inputs the neutral's data into the controls

Starting the test, an AC voltage up to 48 volts pushes a current up to 30 amps into the entire neutral ground system

The voltage across and only the current thru the target neutral is measured, not the total current pushed thru all grounds

While the polarity of the voltage & current are swapped several times, the neutral's resistance is computed

When test numbers stabilize, press HOLD to freeze the results

After the test is run, the Ω-CHECK™ tester provides the following information:

The % of the original neutral remaining	The resistance ratio compared to a new neutral
The resistance of the neutral in Ω/100'	The voltage and current of the tested neutral
The power factor of the neutral	The option to download test results to SD chip

Cable Connection Application Note

There are two methods of connecting the remote, or far, end of the cable neutral to the **Ω-CHECK™** controls. Usually the two cable reels provided are used, however there are circumstances where this may not be the best method.

① Two 500' cable reels are provided – one is continuous and the other has connector breaks every 100'

The Ω-CHECK™ tester must connect to both ends of the neutral tested. The **Local** connection is made to the neutral near the instrument and the **Remote** is made at the far end, possibly 500' – 1000' away. The cables provided are light but rugged enough to be easily dragged to the far end and rewound after. If this method of Remote connection is not practical, or more than 1000' away and you don't have an additional reel, there is an alternative. (Using the cable reels, the maximum test cable length can be 1500' - 2000'.)

② Use the test cable's conductor or a parallel conductor, if de-energized, as the Remote connection lead

If the cable tested, or a parallel cable, is de-energized, its conductor can be used as the Remote connection to the instrument. Connect the Remote lead from the front panel to the open conductor at the near end. The far end of that conductor must also be open and be connected to the neutral of the cable tested. The test is then carried out as normal, however, the resistance of the conductor must be known and subtracted from the resistance of the neutral being tested. This operation is simple to understand, perform, and calculate the resistance of the tested neutral to determine how it compares to a perfect neutral.

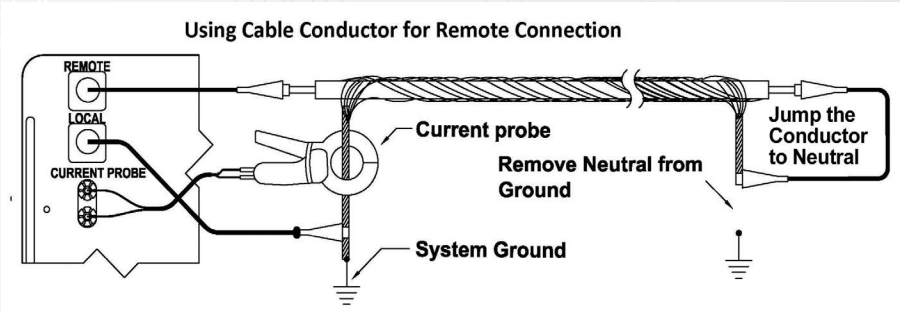

Sample Screen Shots

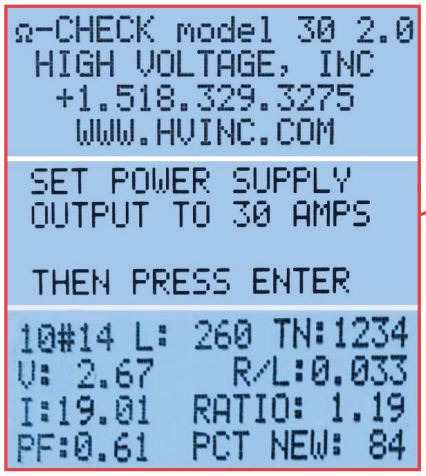

Ω-CHECK™ Control Panel

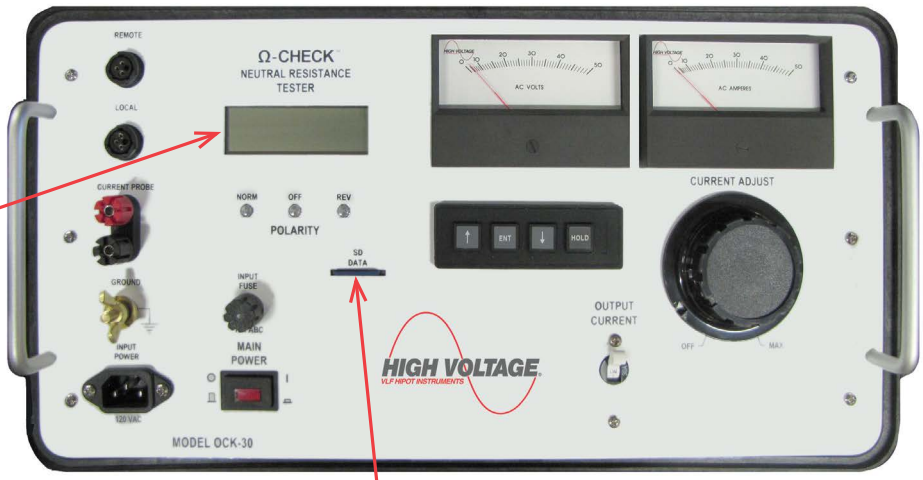

Test Data Export from SD Card

TEST	TIME	DATE	NEUTRAL	LENGTH	VOLTS	AMPS	PF	R/L	RES	PCT
8	13:22	03/26/13	20 #14	375	18.25	30.70	0.22	0.035	0.130	40
1	14:27	07/15/13	16 #12	468	5.27	28.90	0.40	0.016	0.073	70
2	14:30	07/15/13	16 #12	468	1.89	10.33	0.40	0.016	0.074	69

Data Output: The Ω-CHECK™ tester uses an SD Card to capture the test data. The saved data can be downloaded to a spreadsheet for manipulation and

Ω-CHECK™ Package

Controls/Power Supply
Cable Reels A & B, each 500'
Clamp-on Current Meter, 200A
Clamps for cable connections, 2 pcs
Cable to clamp-on meter, 10'
Cables between reels & neutral, 10'
Line cord 10' & #2 Ground Cable, 20'
SD memory card & Operators manual

Model OCK-30 Specifications

Electrical:	
Input power:	1800 VA, 120 V @ 60Hz, 15 A max.
Output power:	0-48 VAC, 30 A max.
Instrumentation	
Current probe:	Output: 1000:1
V & I meters:	Accuracy: ±2%
V & I measured:	Accuracy: ±1%
Phase angle – P.F.	±1.5°
Environmental	
Temperature Operating:	0 to 45°C, 0 to 113°F
Storage:	-20° to 70°C, -5° to 158°F
Humidity:	85% noncondensing
Dimensions & Weight	
Control box:	20"w x 12"d x 19"h, 55 lbs
Cable reels (ea.):	12"w x 11.5"d x 14.75"h, 23 lbs
Cables & Accessories	Supplied in canvas HVI bag

Cable Testing & Other Products from High Voltage, Inc.

HVI is the world's source for VLF technology. HVI is a world leader in the design and production of high voltage equipment for testing utility, industrial, and commercial applications for most types of substation apparatus, aerial lifts, motors and generators, MV & HV cable, and cable fault locating products. One of our specialties is test equipment for performing **AC Withstand and AC Diagnostic testing** of medium and high voltage cables. We also offer **Tan Delta and Partial Discharge** cable testing diagnostic equipment to operate with our VLF or 50/60 Hz AC power supplies. A quick summary follows:

Very Low Frequency (VLF) AC Hipots: 28 kV – 200 kV, sine wave producing, .4 uF – 50 uF load rating, 0.1 Hz – 0.01 Hz.
Tan Delta & Partial Discharge: HVI designed TD products and PD from others for diagnostic testing cables rated up to 230 kVac
Cable Fault Locating: Standard Thumpers up to 9/18/36 kV @ 3200 joules – custom to 100 kV @ 7500 joules. VLF/Thumper combo, & TDR available
AC Dielectric testers up to 50 kVA, Field Portable AC hipots, DC Voltage Hipots to 600 kV, Oil Testers, Bucket Truck Boom and Liner AC & DC Hipots, HV Dividers, and more.

www.hvinc.com

HIGH VOLTAGE
VLF HIPOT INSTRUMENTS

HIGH VOLTAGE, INC.
31 County Route 7A • Copake, NY 12516 • (518) 329-3275 • Fax: (518) 329-3271
E-Mail: sales@hvinc.com • Web: www.hvinc.com