SPEC*monitor*

The SPEC*monitor* is a partial discharge (PD) measurement device comprising a spectrum analyzer, an acoustic detector, and a conventional PD monitor in one instrument. This combination enables PD measurements even with high levels of background noise e.g. on power transformer within substations or power plants.

Observing the frequency spectrum of a harshly disturbed PD signal allows to select frequency bands with less disturbances. Using this center frequency for a PD acquisition, gives a largely improved signal-to-noise ratio resulting in a clear pattern acquisition. The combination of spectrum analyzer and PD detector within one instrument greatly expands the measurement possibilities when analyzing the insulation systems in a noisy environment.

In the standard version, the SPEC*monitor* comes with an eight or four channel multiplexer to directly select the input signal. The instrument provides five different display modes and several interfaces like e.g. TCP/IP or modem for remote control and diagnosis.

Measuring partial discharge within noisy environment

SPEC Mode
The SPEC mode shows the frequency spectrum of the input signal up to 10MHz. Three traces for the current input channel allow storing, comparing and processing of this spectrum. The bandwidth of the demodulated signal can be set to 9 kHz or 270 kHz, respectively.

SCOPE Mode
The SCOPE mode displays the PD pattern versus phase as known from the ICM*series*. Hereby, the selected center frequency and bandwidth of the SPEC mode is used, in order to disregard frequency ranges occupied with disturbances. The SCOPE mode offers viewing an oscilloscopic display (below) as well as a pattern display.

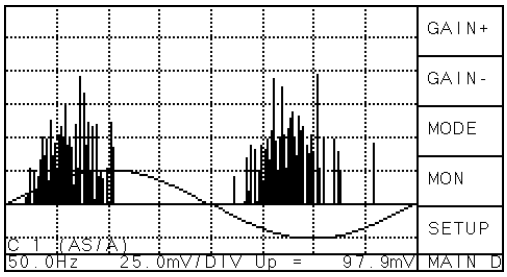

Scope display

SPEC*monitor* - PD Monitor with Selectable Frequency

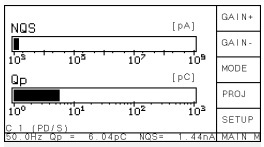

Monitoring display

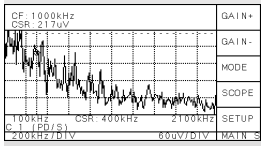

Spectrum display

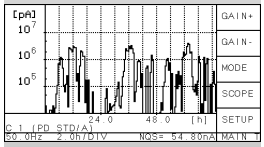

Trending display

Acoustic sensor with magnetic holder

Bushing adapter and coupling unit

MON Mode

The monitoring display allows to set alarm levels of NQS or Qp that will trigger when those values are exceeded.

TIME Mode

Additionally, the SPECmonitor collects and displays PD data over a specified time interval for easy trending and observations of changes in the Qp and NQS levels of the monitored system.

Software

Besides this autonomous functions, the instrument can be connected to a computer via serial interface, modem, or TCP/IP. A special software allows the remote control of the instrument and the download of the stored data. An autoscan function takes the trending information as well as the phase-resolved pattern of one or multiple units.

Accessories

It is possible to connect acoustic sensors (AS), UHF sensors, or the standard coupling unit from the bushing test tap to the SPECmonitor.

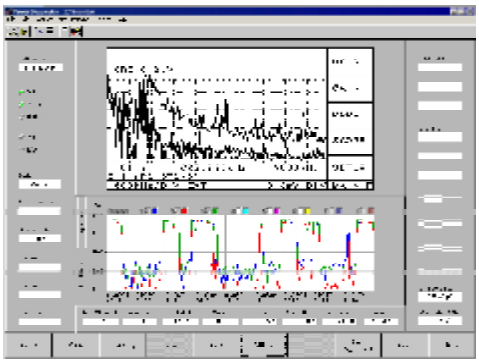

SPEC*monitor software*

Different preamplifiers like RPA1F, RPA1L or FCU2 can be used in case of weak signals or to drive long cable lengths.

SPEC*monitor in a full 19" rack*

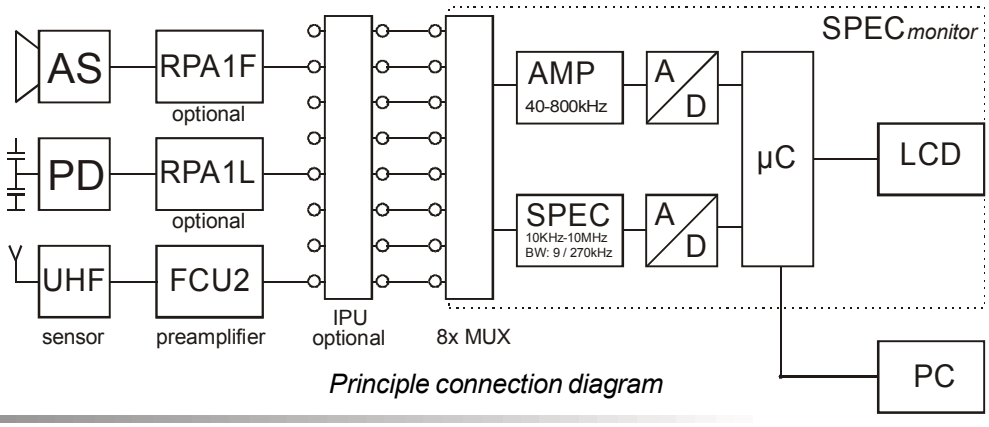

Principle connection diagram

Combining a spectrum analyzer and the multifunctional ICM*monitor* greatly expands the measurement possibilities of the SPEC*monitor*. This combination allows PD monitoring even with a large background noise and with different sensors connected.

Power Diagnostix Systems GmbH
Vaalser Strasse 250
52074 Aachen
Germany

Email: support@pdix.com
Web site: www.pdix.com
Tel: + 49 241 74927
Fax: + 49 241 79521